9GA0312P3J001 With pulse sensor with PWM control

PWM duty cycle

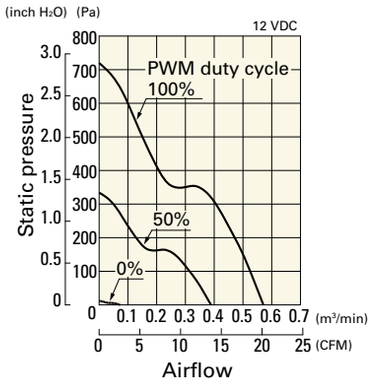

Operating voltage range

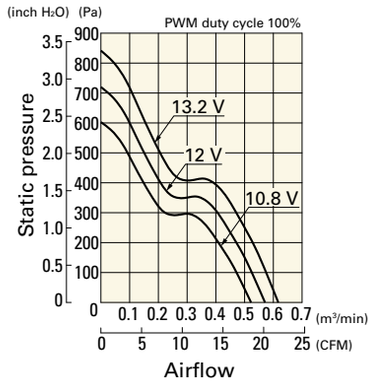

PWM duty - Speed characteristics example

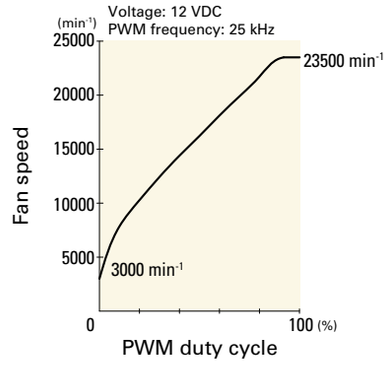

9GA0312P3G001 With pulse sensor with PWM control

PWM duty cycle

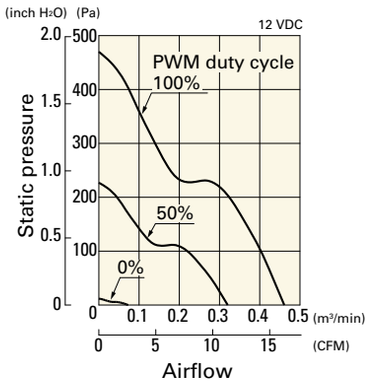

Operating voltage range

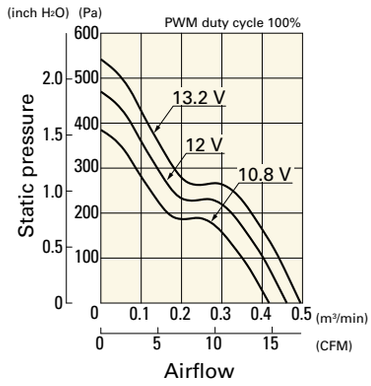

PWM duty - Speed characteristics example

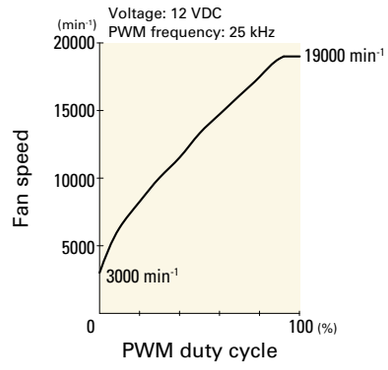

Airflow - Static Pressure Characteristics

9GA0312E3001 With pulse sensor

Operating voltage range

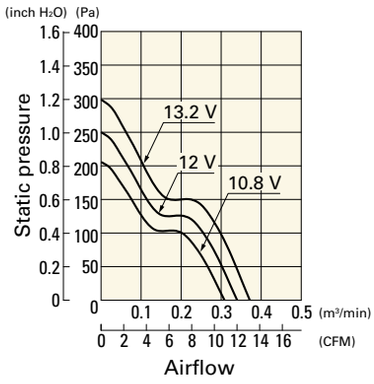

9GA0312H3001 With pulse sensor

Operating voltage range

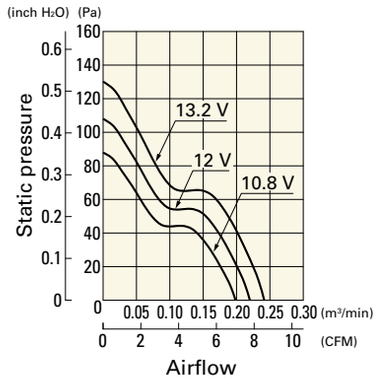

Beijing Hengrui Mechanical and Electrical Equipment Co,Ltd
+86 10-62547612 zhangyu@bjhengrui.cn en.bjhengrui.com

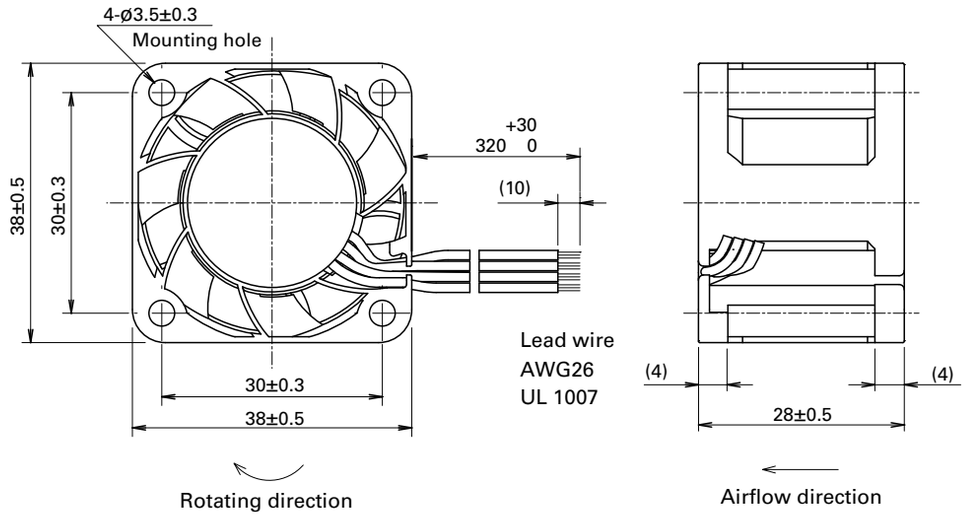

Reference Dimensions of Mounting Holes and Vent Opening (unit: mm)

Inlet side, Outlet side

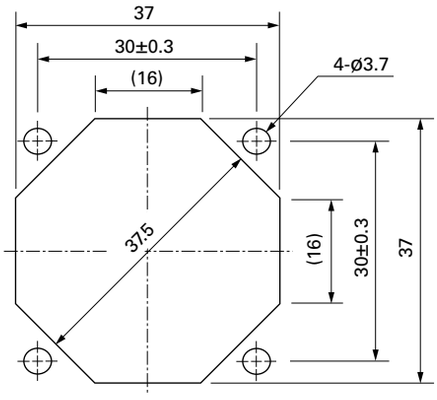

Options

Finger guards page: p. 598

Model no.: 109-1065

Beijing Hengrui Mechanical and Electrical Equipment Co,Ltd
+86 10-62547612 zhangyu@bjhengrui.cn en.bjhengrui.com

40×40×10 mm

San Ace 40 9P type

General Specifications

- Material ..... Frame: Plastic (Flammability: UL 94V-0), Impeller: Plastic (Flammability: UL 94V-1)
- Expected life ..... See the table below. (L10 life: 90% survival rate for continuous operation in free air at 60˚C, rated voltage) Expected life at 40°C is for reference only.
- Motor protection function ..... Locked rotor burnout protection, Reverse polarity protection For details, please refer to p. 616.
- Dielectric strength ..... 50/60 Hz, 500 VAC, for 1 minute (between lead wire conductors and frame)
- Insulation resistance ..... 10 MΩ min. at 500 VDC (between lead wire conductors and frame)
- Sound pressure level (SPL) ..... A-weighted sound pressure level (SPL) at 1 m away from the air inlet.
- Storage temperature ..... -30 to +70˚C (Non-condensing)
- Lead wire ..... ⊕Red ⊖Black or Blue Sensor Yellow
- Mass ..... 19 g

Specifications

The models listed below **have ribs and a pulse sensor.**

Model no.	Rated voltage [V]	Operating voltage range [V]	Rated current [A]	Rated input [W]	Rated speed [min⁻¹]	Max. airflow [m³/min]	Max. airflow [CFM]	Max. static pressure [Pa]	Max. static pressure [inchH₂O]	SPL [dB (A)]	Operating temperature [˚C]	Expected life [h]
109P0405H901	5	4.5 to 5.5	0.16	0.8	6200	0.15	5.3	41.2	0.165	25	-10 to +60	40000/60˚C (70000/40˚C)
109P0405M901			0.11	0.55	5000	0.12	4.2	27	0.108	21		
109P0412H901	12	7 to 13.2	0.07	0.84	6200	0.15	5.3	41.2	0.165	25		
109P0412M901			0.06	0.72	5000	0.12	4.2	27	0.108	21		
109P0424H901	24	20.4 to 27.6	0.04	0.96	6200	0.15	5.3	41.2	0.165	25		

Note: Sensor and control options are available for selection. Refer to the table on p. 645.

Airflow - Static Pressure Characteristics

109P0405H901 With pulse sensor

Operating voltage range

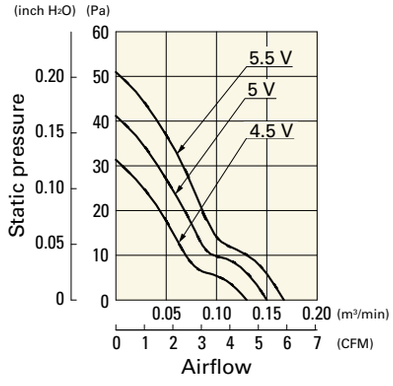

109P0405M901 With pulse sensor

Operating voltage range

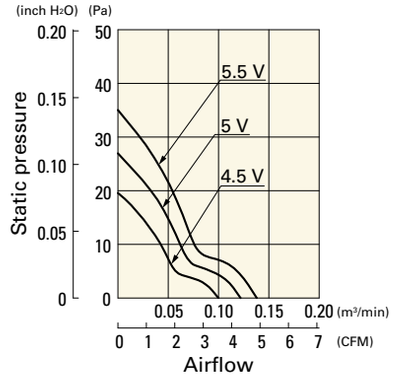

109P0412H901 With pulse sensor

Operating voltage range

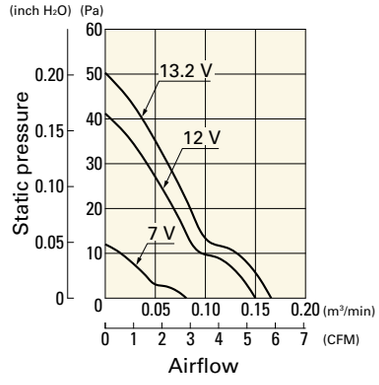

Beijing Hengrui Mechanical and Electrical Equipment Co,Ltd
+86 10-62547612 zhangyu@bjhengrui.cn en.bjhengrui.com

109P0412M901 With pulse sensor

Operating voltage range

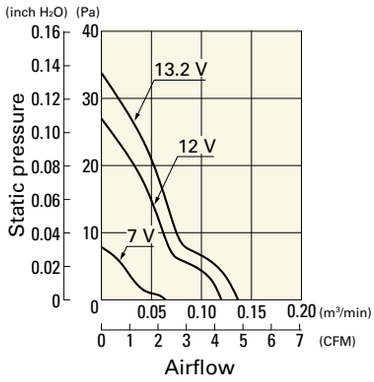

109P0424H901 With pulse sensor

Operating voltage range

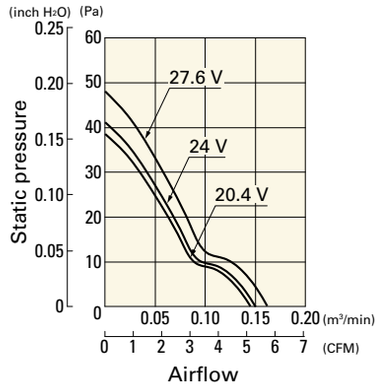

Dimensions (unit: mm)

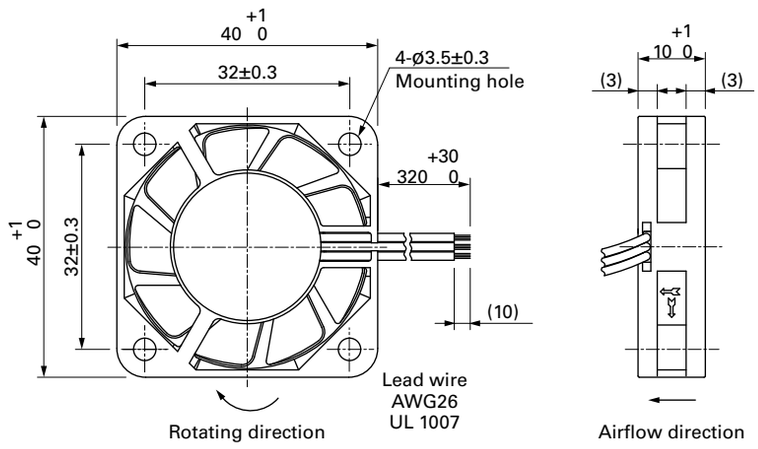

Reference Dimensions of Mounting Holes and Vent Opening (unit: mm)

Inlet side, Outlet side

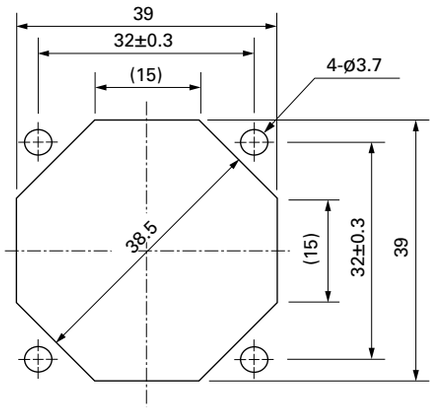

Options

Finger guards page: p. 598

Model no.: 109-059, 109-059H

Beijing Hengrui Mechanical and Electrical Equipment Co,Ltd
+86 10-62547612 zhangyu@bjhengrui.cn en.bjhengrui.com

40×40×15 mm

San Ace 40 9GA type Low Power Consumption Fan

General Specifications

- Material ..... Frame: Plastic (Flammability: UL 94V-0), Impeller: Plastic (Flammability: UL 94V-0)
- Expected life ..... See the table below. (L10 life: 90% survival rate for continuous operation in free air at 60˚C, rated voltage) Expected life at 40°C is for reference only.
- Motor protection function ..... Locked rotor burnout protection, Reverse polarity protection For details, please refer to p. 616.
- Dielectric strength ..... 50/60 Hz, 500 VAC, for 1 minute (between lead wire conductors and frame)
- Insulation resistance ..... 10 MΩ min. at 500 VDC (between lead wire conductors and frame)
- Sound pressure level (SPL) ..... A-weighted sound pressure level (SPL) at 1 m away from the air inlet.
- Storage temperature ..... -30 to +70˚C (Non-condensing)
- Lead wire ..... ⊕Red ⊖Black Sensor Yellow Control Brown (For models without PWM control, there is no speed control wiring.)
- Mass ..... 28 g

Specifications

The models listed below **have ribs and a pulse sensor with PWM control.**

Model no.	Rated voltage [V]	Operating voltage range [V]	PWM duty cycle* [%]	Rated current [A]	Rated input [W]	Rated speed [min⁻¹]	Max. airflow [m³/min]	Max. airflow [CFM]	Max. static pressure [Pa]	Max. static pressure [inchH₂O]	SPL [dB (A)]	Operating temperature [˚C]	Expected life [h]
9GA0405P7C001	5	4.75 to 5.25	100	0.16	0.8	8800	0.24	8.5	86	0.35	33	-20 to +70	60000/60˚C (90000/40˚C)
			30	0.03	0.15	1250	0.03	1.1	1.7	0.007	10		
9GA0412P7G001	12	10.2 to 13.8	100	0.17	2.04	13100	0.36	12.7	192	0.77	42		40000/60˚C (70000/40˚C)

* PWM frequency is 25 kHz. Models without ratings for 0% PWM duty cycle have zero speed at 0%. When control terminal is open, speed is the same as at 100% duty cycle.

The models listed below **have ribs and a pulse sensor.**

Model no.	Rated voltage [V]	Operating voltage range [V]	Rated current [A]	Rated input [W]	Rated speed [min⁻¹]	Max. airflow [m³/min]	Max. airflow [CFM]	Max. static pressure [Pa]	Max. static pressure [inchH₂O]	SPL [dB (A)]	Operating temperature [˚C]	Expected life [h]
9GA0412G7001	12	7 to 13.8	0.17	2.04	13100	0.36	12.7	192	0.77	42	-20 to +70	40000/60˚C (70000/40˚C)
9GA0412H7001			0.06	0.72	7300	0.2	7.1	59.6	0.24	28		
9GA0412L7001			0.04	0.48	4400	0.11	3.9	22.7	0.09	20		

Note: Sensor and control options are available for selection. Refer to the table on p. 647 to 648.

Airflow - Static Pressure Characteristics / PWM Duty - Speed Characteristics Example

9GA0405P7C001 With pulse sensor with PWM control

PWM duty cycle

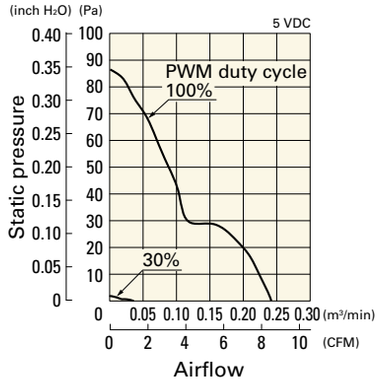

Operating voltage range

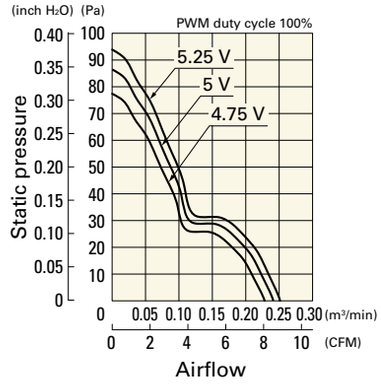

PWM duty - Speed characteristics example

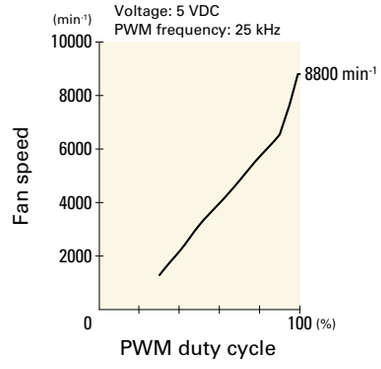

Beijing Hengrui Mechanical and Electrical Equipment Co,Ltd
+86 10-62547612 zhangyu@bjhengrui.cn en.bjhengrui.com